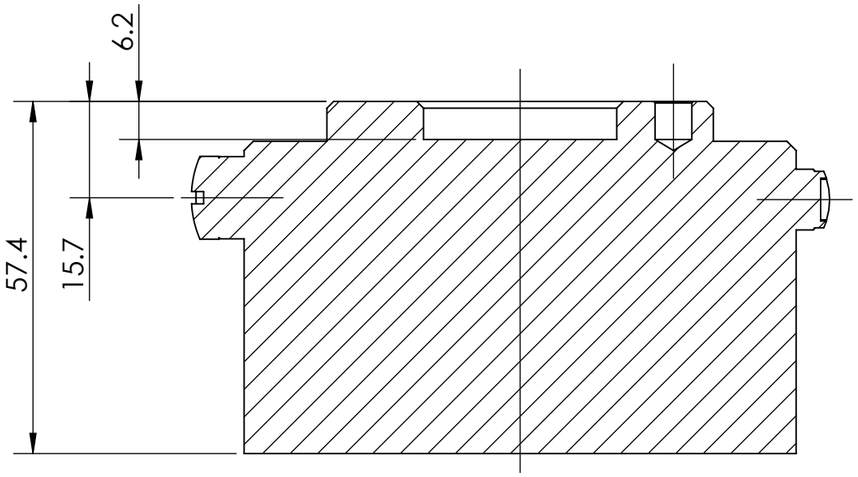

SECTION A-A
SCALE 1 : 1

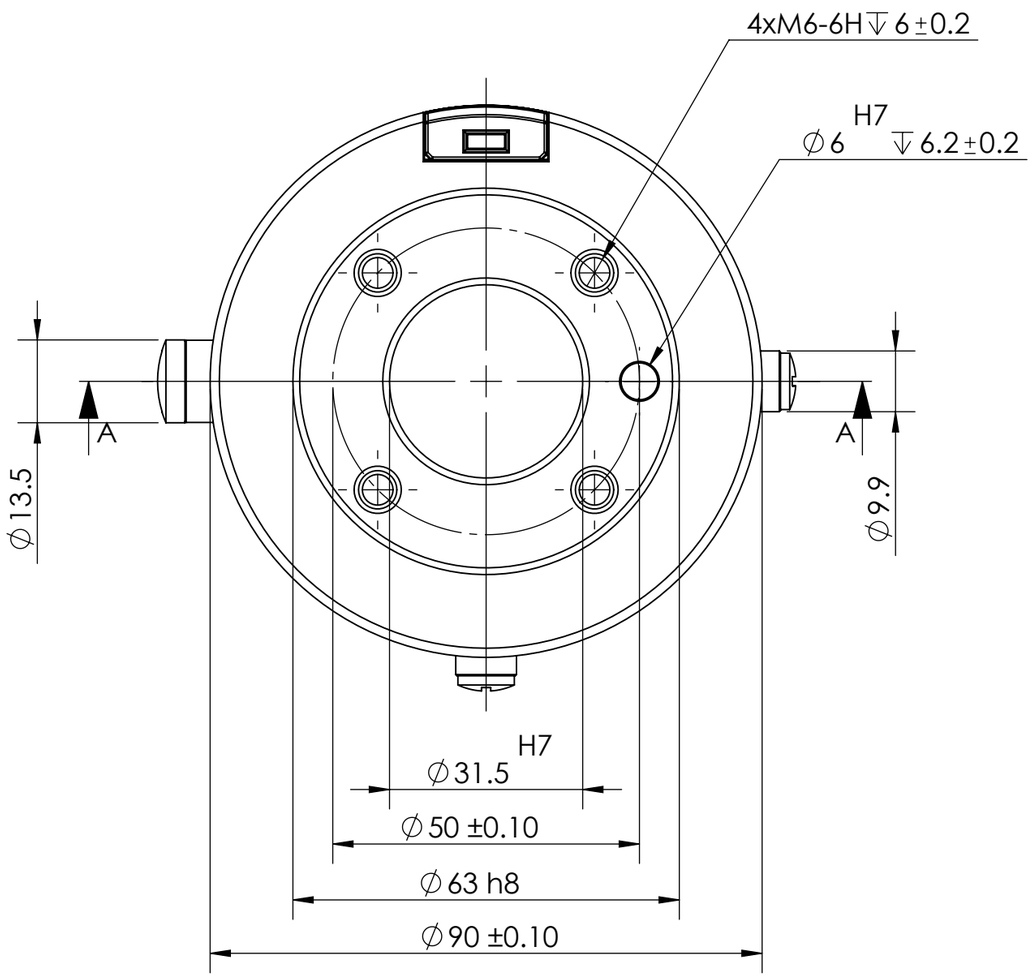

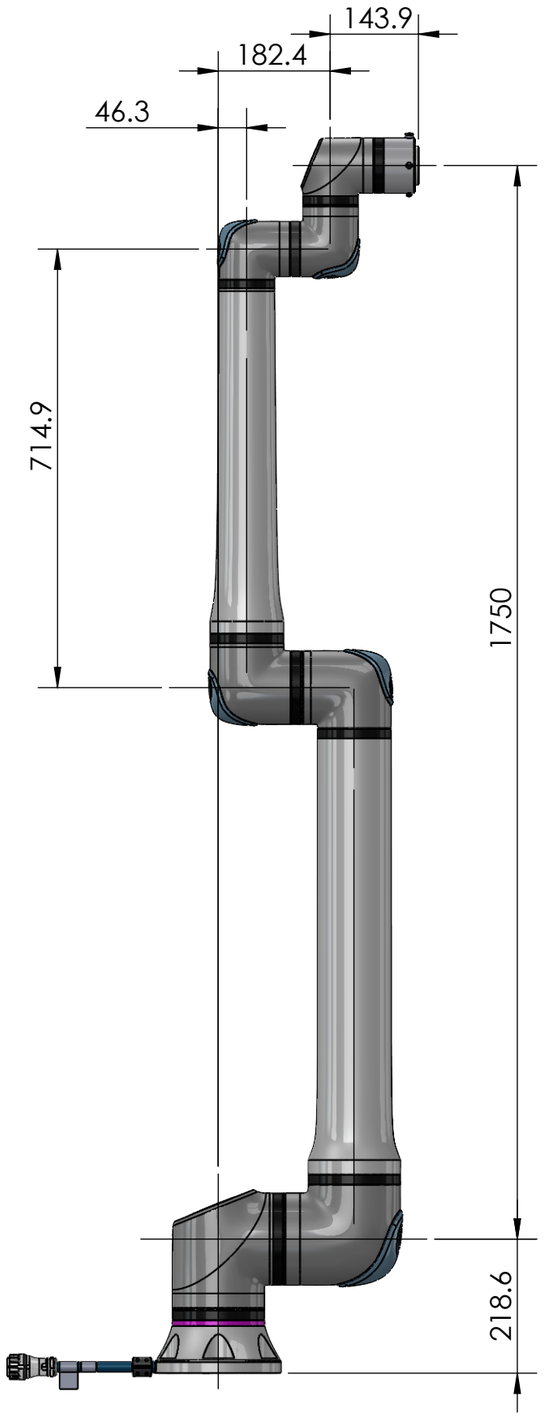

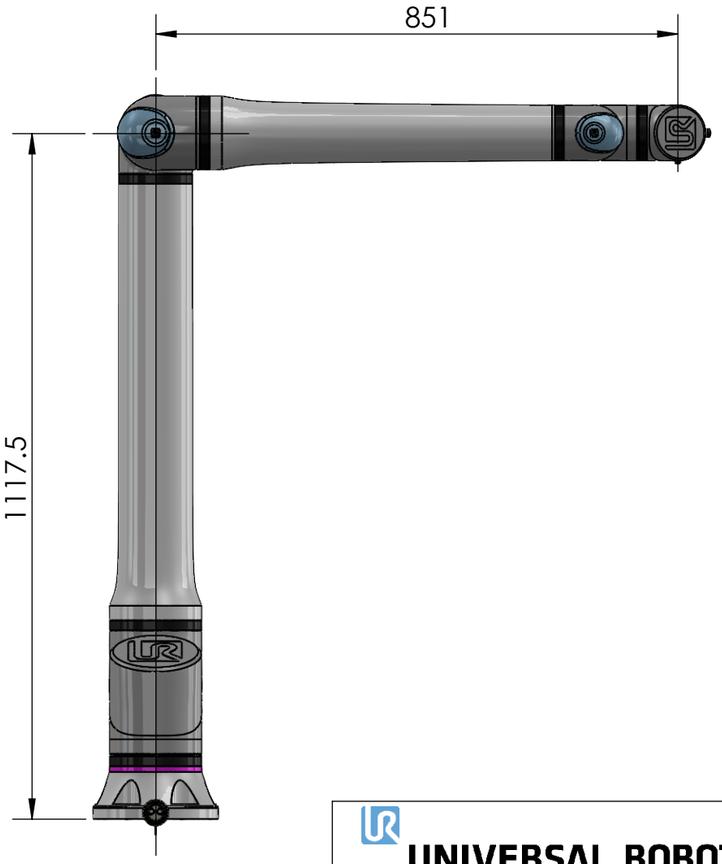

UNIVERSAL ROBOTS
www.universal-robots.com

Title: Asm. Complete robot arm UR10g-1750		
Date of issue	Drawing number: **774-485-01_Filled**	Revision: **B**
Document status: **Review**	A3 SCALE:1:16	SHEET 1 OF 2

PROPRIETARY AND CONFIDENTIAL THE INFORMATION CONTAINED IN THIS DRAWING IS THE SOLE PROPERTY OF UNIVERSAL ROBOTS A/S. ANY REPRODUCTION IN PART OR AS A WHOLE WITHOUT THE WRITTEN PERMISSION OF UNIVERSAL ROBOTS A/S IS PROHIBITED. UNLESS OTHERWISE SPECIFIED: Dimensions are in millimeters.

UR10g Work area, Top view

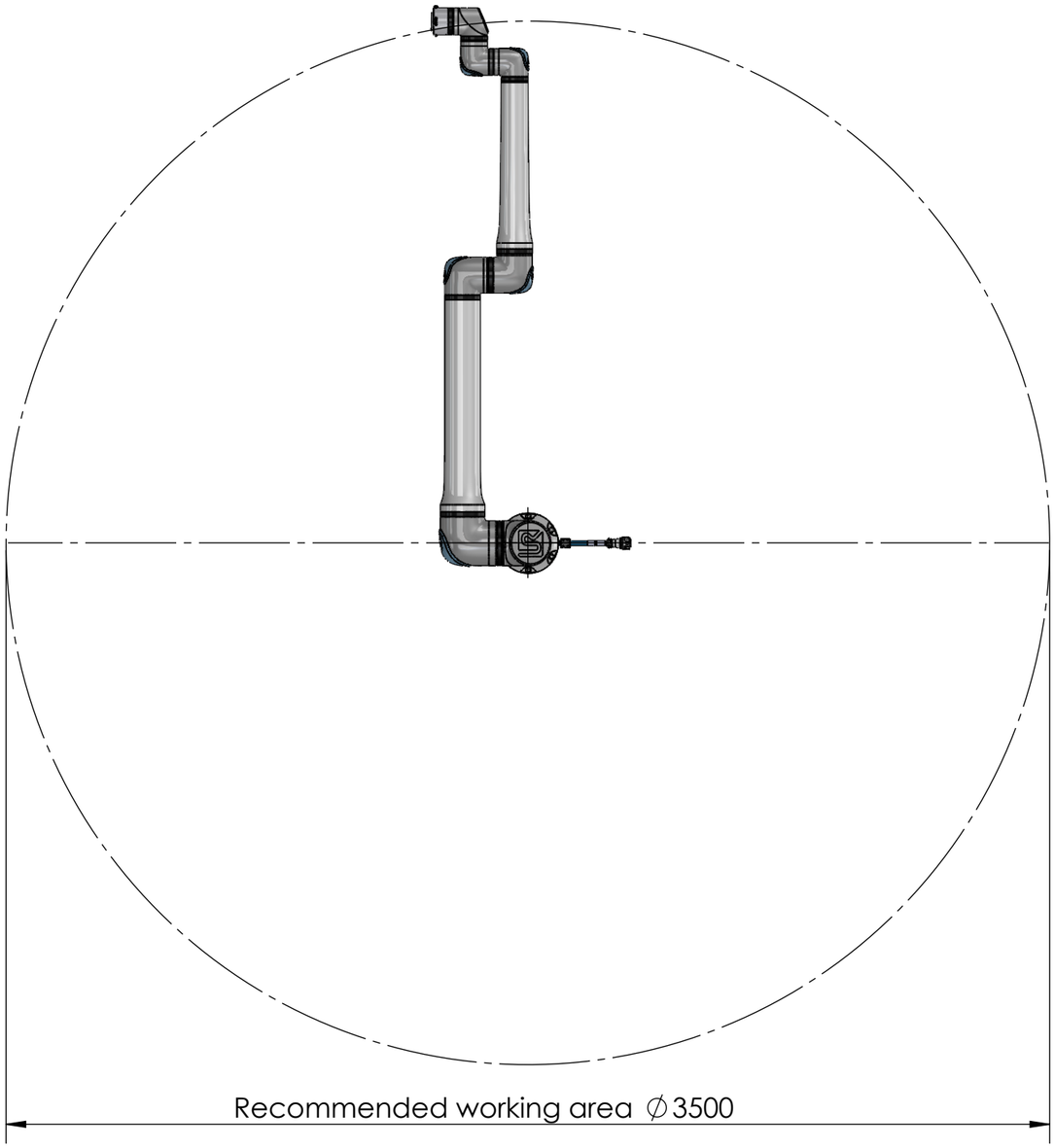

UR10g Work area, Side view

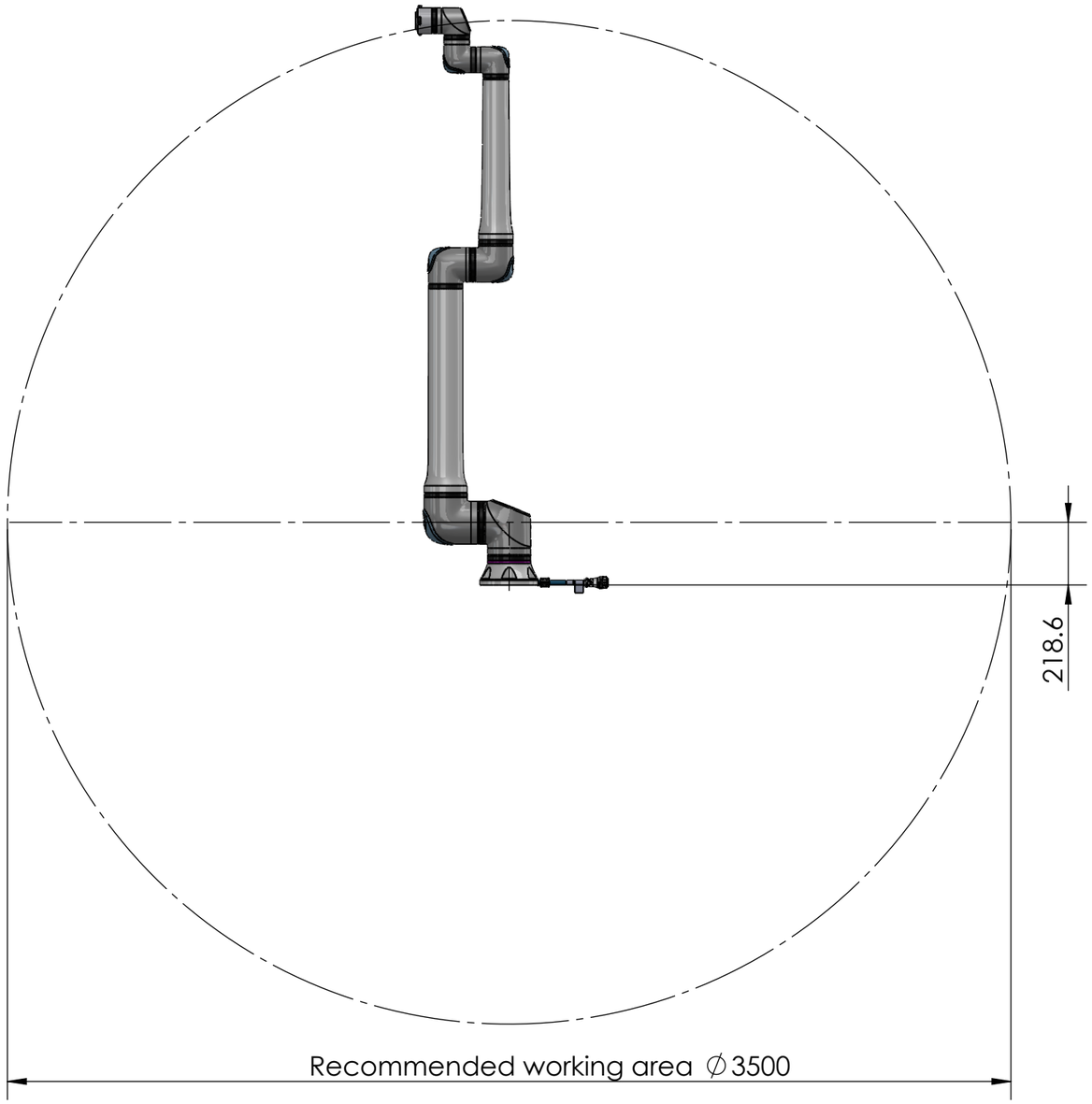

UNIVERSAL ROBOTS
www.universal-robots.com

Title: Asm. Complete robot arm UR10g-1750		
Date of issue	Drawing number: **774-485-01_Filled**	Revision: **B**
Document status: **Review**	A3 SCALE:1:16	SHEET 2 OF 2

PROPRIETARY AND CONFIDENTIAL THE INFORMATION CONTAINED IN THIS DRAWING IS THE SOLE PROPERTY OF UNIVERSAL ROBOTS A/S. ANY REPRODUCTION IN PART OR AS A WHOLE WITHOUT THE WRITTEN PERMISSION OF UNIVERSAL ROBOTS A/S IS PROHIBITED. UNLESS OTHERWISE SPECIFIED: Dimensions are in millimeters.